BITS PILANI DUBAI CAMPUS

DUBAI INTERNATIONAL ACADEMIC CITY

Comprehensive Examination

MEDICAL INSTRUMENTATION -- INSTR C481

DATE: 2-6-2013 MAX. MARKS: 40

TIME: 3 Hrs WEIGHTAGE: 40%

Answer ALL Questions

All Questions Carry Equal marks

1. (a) An atrial synchronous cardiac pacemaker detects signals corresponding to the contraction of the atria. Design the block diagram of the pacemaker.
   (b) Draw and explain different discharge waveforms that can be used in a DC defibrillator.

2. (a) Draw the spirogram and mark the following: Vital capacity (VC), Total lung capacity (TLC), Tidal volume (TV) and Residual volume (RV).
   (b) Suggest and design a system to measure thoracic volume changes during breathing.

3. (a) Differentiate between Sympathetic and Parasympathetic systems.
   (b) Design a scheme for using the EMG from an intact muscle to aid in the control of stimulation of the paralyzed limb.

4. (a) How is the acuity of hearing measured. Explain.
   (b) Design a biofeedback system to reduce heart rate in a person suffering with tachycardia.

5. Design the block diagram of a three channel time division multiplexed radio telemetry system for transmission of bio signals.

2-6-13

SOLUTIONS

MEDICAL INSTRUMENTATION

Comprehensive Examination.

1. (a) The atrial synchronous pacemaker is designed to replace the blocked conduction system of the heart. The natural pacemaker, located at the SA node initiates the cardiac cycle by stimulating the atria to contract and then providing a stimulus to the AV node which after appropriate delay stimulates the ventricles. If the SA node is able to stimulate the atria, the electric signal corresponding to atrial contraction (P wave) can be detected by an electrode implanted in the atrium and used to trigger the pacemaker in the same way that it triggers AV node.

The block diagram design can be as follows.

The atrial signal is amplified and passed through a gate to a monostable multivibrator giving a pulse of 120 ms duration, the delay of the AV node.

Another monostable giving 500 ms is also triggered by the atrial pulse. This causes the gate to block any signals for a period of 500 ms. This eliminates any artifact caused by ventricular contraction.

The falling edge of 120ms pulse is used to trigger a monostable multivibrator of 2ms duration. Thus the pulse acts as a delay allowing the ventricular stimulus pulse to the produced 120ms following atrial contraction. (2)

The block diagram is as follows.

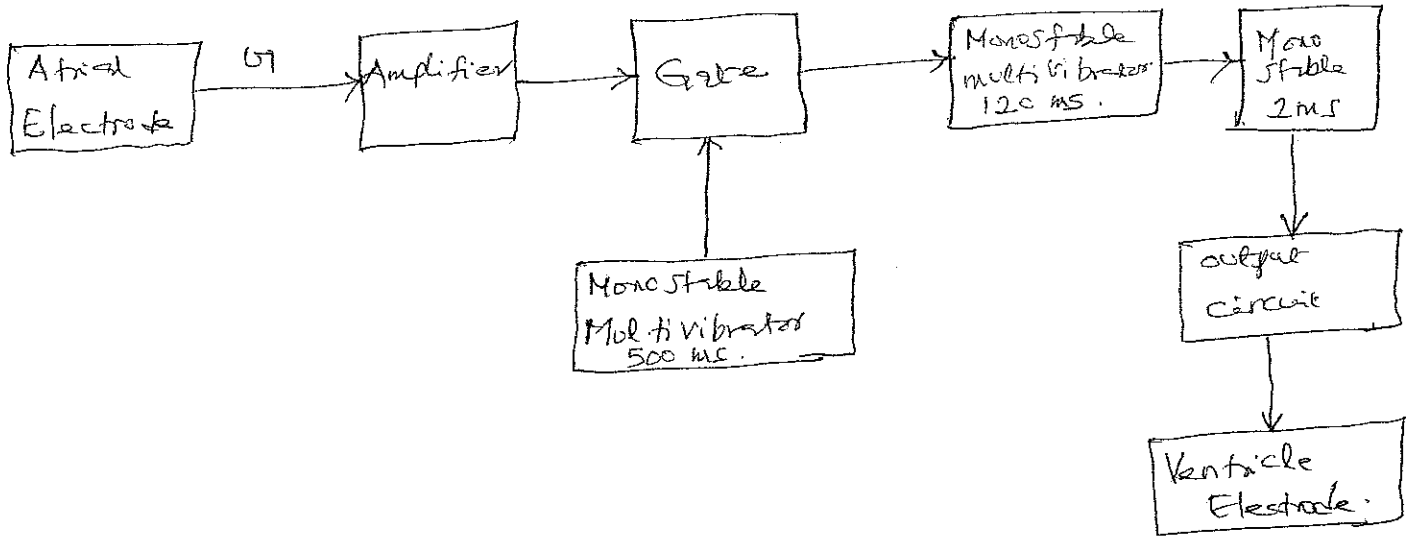

(1b) Depending on the defibrillator energy setting, the amt. of electrical energy discharged by the capacitor may range between 100 and 400 W-sec or Joules. The duration of the effective portion of the discharge is 5 msec. The energy waveform is shown

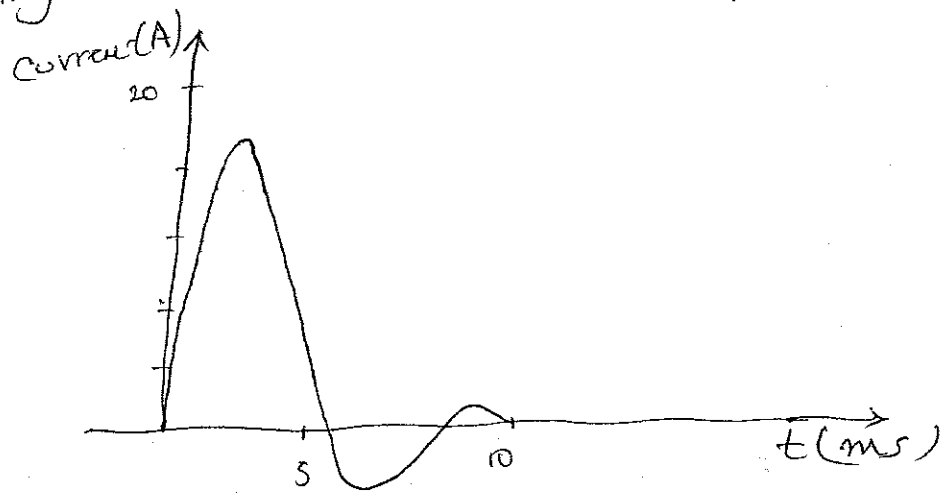

With dc defibrillation there is a danger of the myocardium because of voltage high as 6000V. To reduce the risk dual peak waveforms of longer duration of 10 msec. at a much lower volt. is used. When this type of waveform is used, defibrillation can be achieved with lower levels of delivered energy 50 and 200 W-sec.

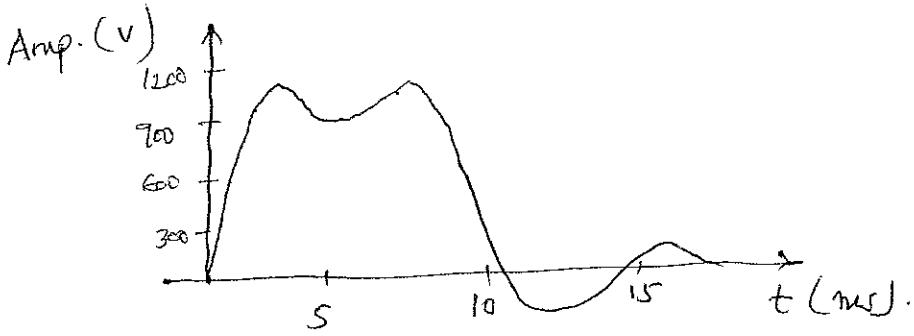

Effective defibrillation at the desirable lower voltage levels is also possible with the truncated waveform. The amp. of this waveform is relatively constant but duration may be varied to obtain the amount of energy required.

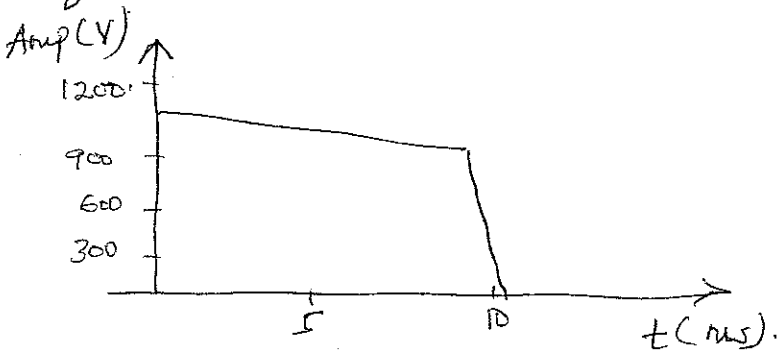

2 (a)

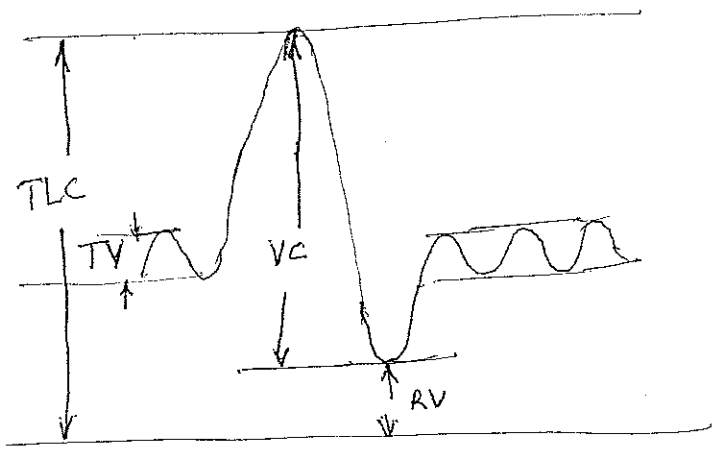

(b) Several devices have been used to measure the kinematics of the chest wall that are associated with changes in thoracic volume. The electrical impedance of the thoracic cavity changes with breathing movements and can be sensed in order to monitor ventilatory activity.

During breathing, the chest wall behaves as though it has two predominant degrees of freedom corresponding to movements of the ribcage and the diaphragm. The sum of the displacements of these ~~ribcage~~ two with the movement of abdomen taken as a measure can yield an estimate of the volume change.

The suggested method is to wrap the strain gages around the torso measure the perimeter change during breathing. A mercury filled silicone rubber tube is used as a ventilatory strain gage.

The suggested block diagram:

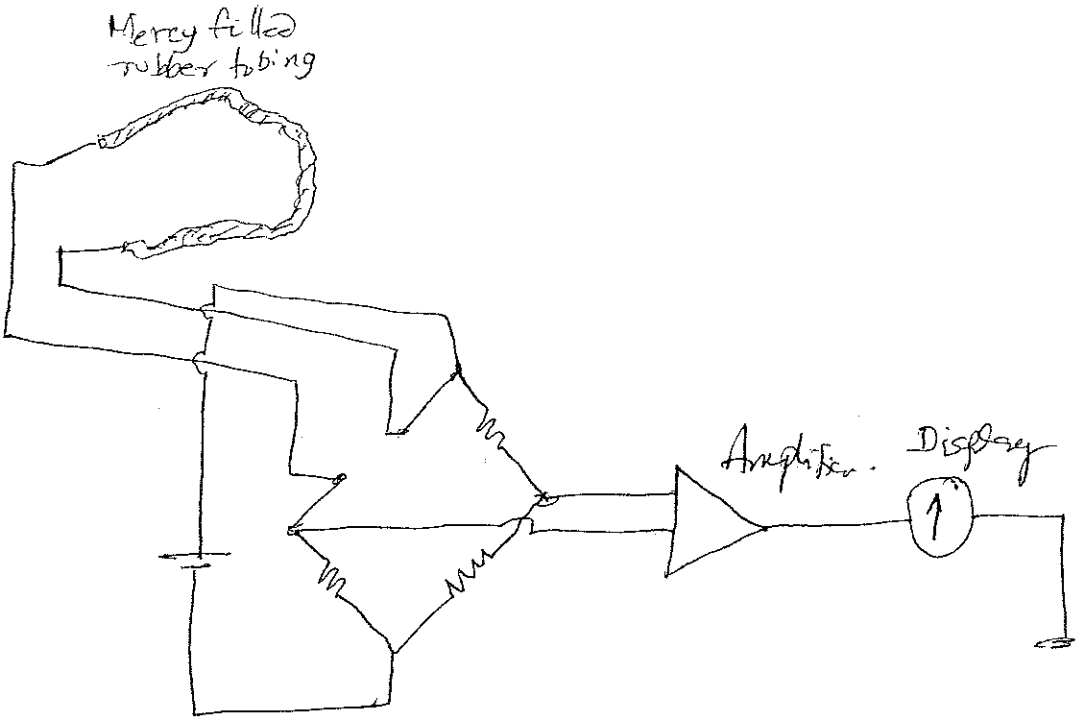

3. (a) The sympathetic nervous system receives its primary control from the hypothalamus and is essentially a function of emotional response. It is responsible for fight or flight reaction to danger and responses to fear and anger. Other indications are dilation of the pupils of the eye and perspiration at the palms

The parasympathetic system is responsible for more specific action. Causes dilation of arteries, inhibition or slowing of the heart, contraction and secretion of the stomach, constriction of the pupils of the eye so on. It is concerned with digestion, sexual activity and waste elimination.

3 (b). The EMG can be used from an intact muscle to stimulate the paralyzed limb. The design of the block diagram should suggest the following. (6)

The EMG from the intact muscle is amplified, filtered from noise and other artifacts. Suitable amplifier is used to amplify the EMG signal. The amplified, and filtered signal is to be power amplified and applied to electrodes to stimulate the muscles. The EMG signals may be modulated with 100 Hz to stimulate the freqs. of the brain.

The modulated signals are applied to the paralyzed limbs. The stimulation can help in controlling the stimulation of the limb.

The EMG signal is amplified, rectified and lowpass filtered before it is used to modulate a stimulator.

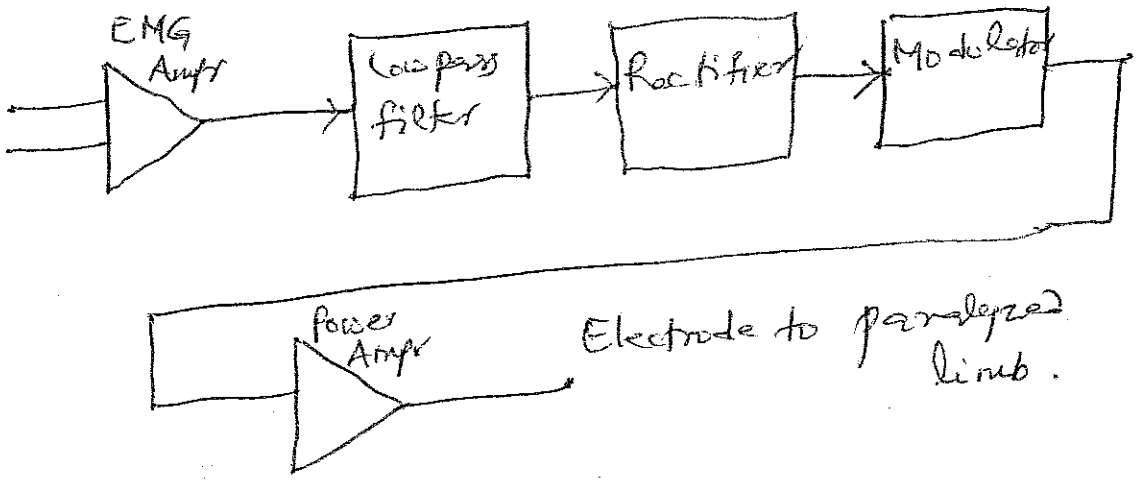

4 (a) Acuity of hearing can be measured with the help of an instrument called an audiometer. Here the sound intensity in an earphone is gradually increased until the sound is perceived by the subject. The hearing in the other ear during this measurement is often masked by presenting a neutral stimulus to this ear. Normally, the threshold of hearing is determined at a no. of freqs. This process is automated in the Bekesy audiometer.

In order to perform measurement, the subject first presses a control button thus starting a reversible motor which drives a volume control and increases the amplitude of the stimulus signal until it is perceived by the subject. The subject then releases the button opening the switch, the subject maintains the volume at a level at which the tone can just be heard. A pen connected to the volume control mechanism draws a line on a moving paper. At the same time the paper drive mechanism which is linked to instruments frequency control changes the freq. of the tone.

(7)

The audiogram is calibrated not in absolute values of the perception but in relative values referred to the acuity of normal subjects.

4b. Tachycardia is a phenomena of consistently high heart rate. The heart rate can be reduced by using biofeedback. Since the heart rate can be related to heart rate, we can use R wave of the ECG to design the feed back system. The R wave can be used to trigger a mono stable to a generate a pulse width of sufficient enough ~~amplit~~ to delay the consequent pulses. The delayed pulse can be used to drive a bulb or head phones to retrain the brain in such a fashion to reduce the heart rate. The suggested block diagram

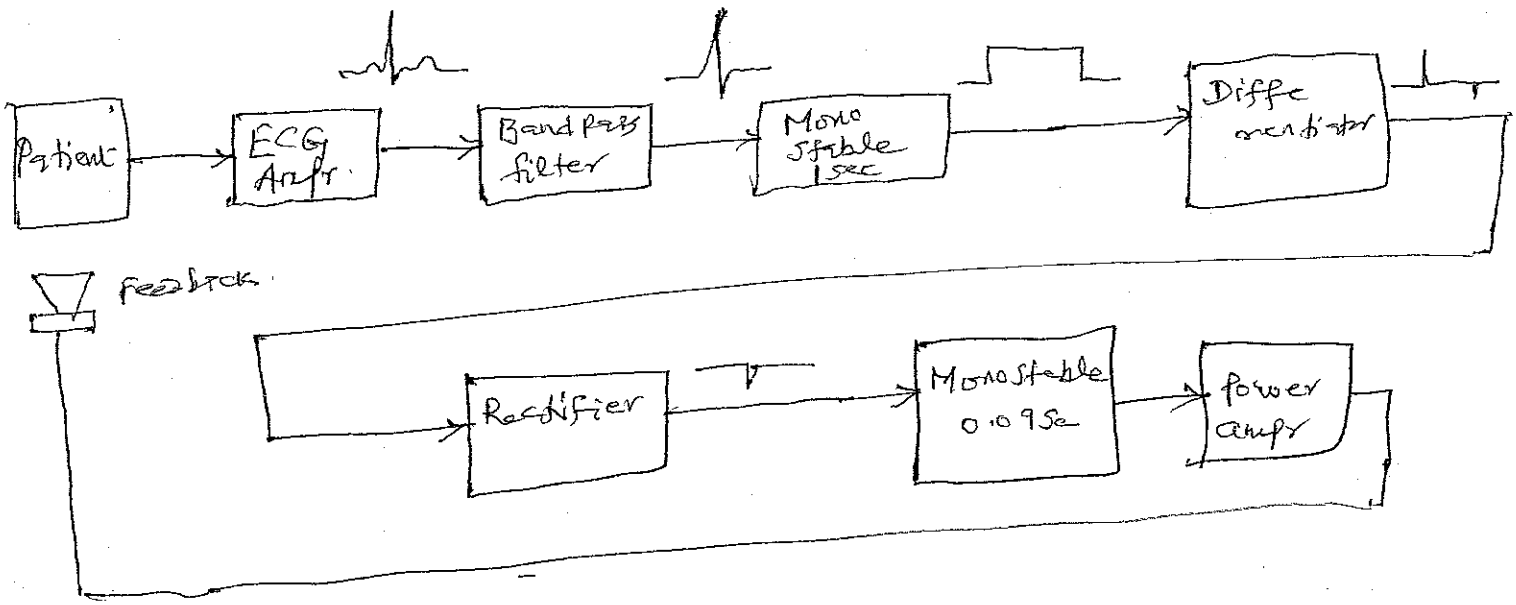

(5) The design block dgm. of a 3channel bio tele metry system. (9)

TRANSMITTER.

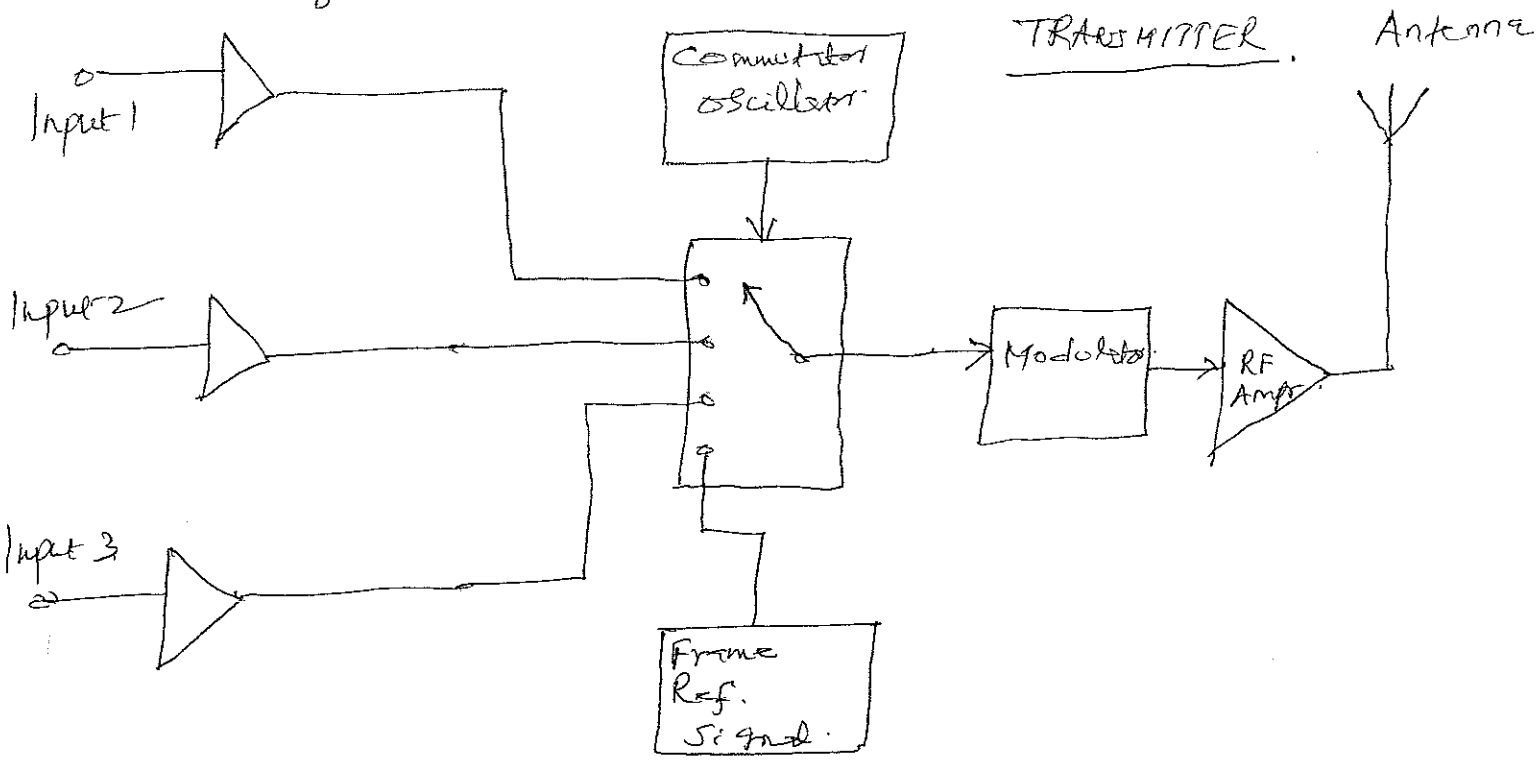

RECEIVER.

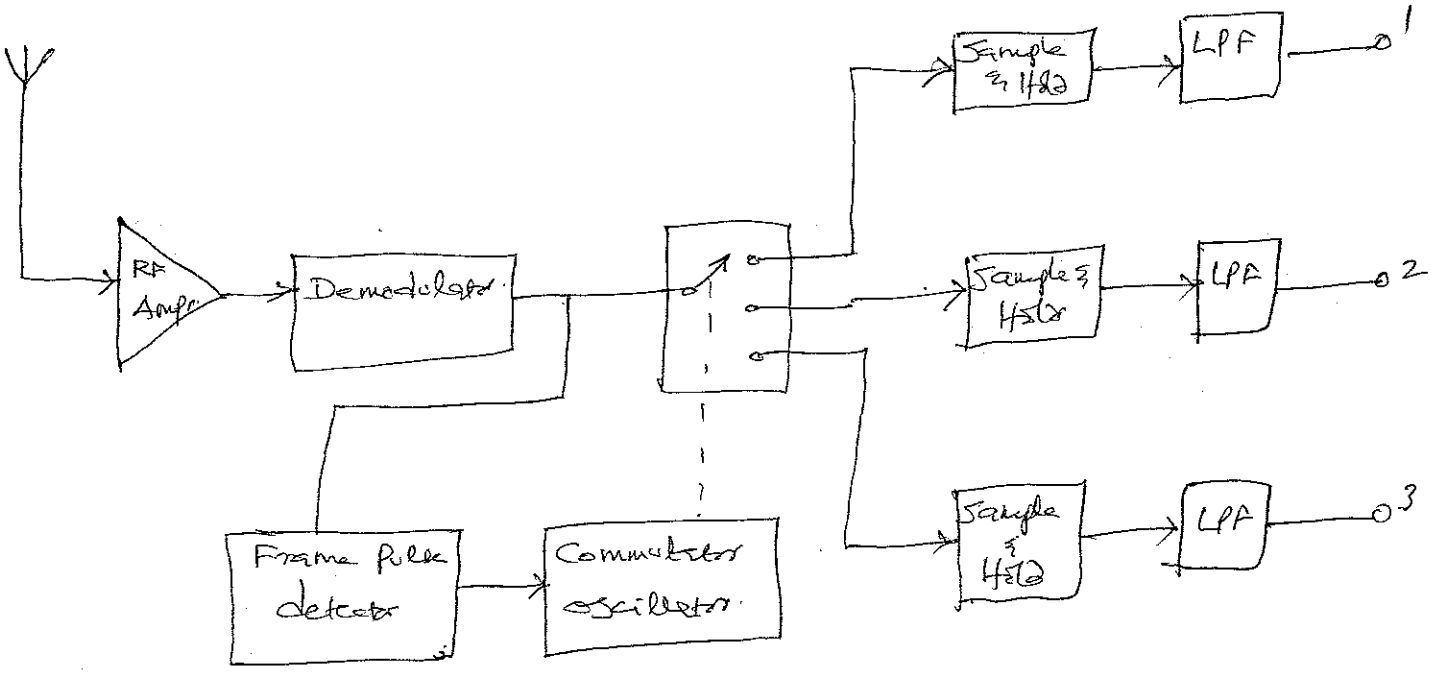

BITS PILANI DUBAI CAMPUS

DUBAI INTERNATIONAL ACADEMIC CITY

TEST 2(OPEN BOOK)

MEDICAL INSTRUMENTATION -- INSTR C481

DATE: 22-4-2013 MAX. MARKS: 20

TIME: 50 MTS WEIGHTAGE: 20%

Answer ALL Questions
All Questions Carry Equal marks

1. In DVT (deep venous thrombosis), a blood clot in the veins of the groin or thigh partially blocks the blood from returning to the heart from the legs. This partial blockage increases the amount of blood that remains in the leg and therefore, increases the volume of the leg. Suggest and design a plethysmography technique to measure the same.

2. When the lungs change volume during breathing, a mass of gas is transported through the airway opening by convective flow. Measurement of variables associated with the movement of this gas is of major importance in studies of the respiratory system. The volume flow is used to changes of lung volume. Suggest the block diagram of a system to measure the air flow.

3. Design a biofeedback system for suppressing epileptic activity in the brain. Show the block diagram and explain the same.

4. Design a radio telemetry system block diagram to transmit three parameters namely body temperature, pulse rate and blood pressure. Suggest the suitable frequencies and modulation techniques.

22-4-2013.

SOLUTIONS

MEDICAL INSTRUMENTATION

TEST 2

1. In DVT a blood clot in the veins of the groin blocks the blood. We can use impedance plethysmography to diagnose this. This is performed by placing a cuff around the thigh and inflating it. This inflation compresses the veins and prevents blood from returning to the heart. The volume of the calf is then measured using electrodes that have been placed on the calf. Once this measurement is made, ~~the~~ A known current is passed through two electrodes and the voltage developed across the other two electrodes is measured. The impedance is calculated by taking the ratio of voltage to current. Once the measurement is made, the cuff is deflated allowing the trapped blood to flow back out of the leg. The calf volume measurement is then repeated.

If DVT is present, the normal difference in leg volume (with cuff inflated vs cuff deflated) will be diminished indicating that the leg veins are partially obstructed by a blood clot.

causing increased leg volume. This finding indicates that DVT is present.

(2) Measurement of the motion of material passing through a system requires that the sensor be placed at a position traversed by a known fraction of the material. In respiratory expts, those involving measurement of breathed gas, the usual practice is to have the entire flow stream pass through or into the instrument. Any pressure imposed at the airway during measurements at the airway opening must be withstood by the sensor without damage, distortion or leakage. The device should not obstruct breathing or produce a back pressure during flow. The measurement procedure must not alter inspired air by adding heat or toxins.

In rotating vane flow meter, this type of sensor has a small turbine in the flow path. The rotation of the turbine can be related to the volume flow of gas. Mechanical linkages have been used to display parameters of the flow such as peak flow and integral over an expiration.

Interruption of light beam by the turbine has the beam sensed and converted to voltages proportional to flow and or its integral to be recorded or displayed continuously. In devices such as this, the mass of the moving parts and the friction between them combine to prevent high freq. motions of the turbine in response to accelerating flow. This precludes their use in the measurement of alternating bidirectional flows and makes them primarily suitable for clinical screening.

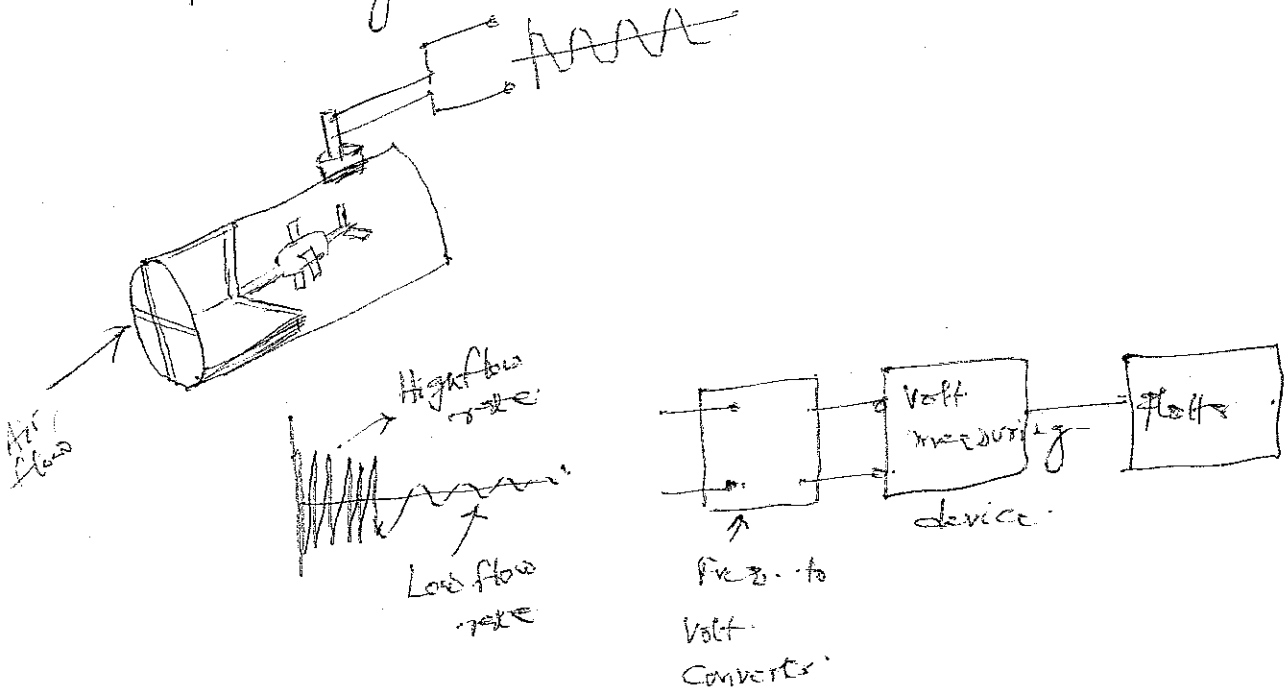

3 Epileptic activity causes abnormal electrical activity in the brain. This abnormal activity can be suppressed by using biofeedback. Biofeedback is a process where the EEG picked up from the patient is analysed for the abnormal freqs. present and their amplitudes. This abnormal freqs. and amplitudes are to be filtered out and the purified EEG to be fed back to the patient in the form of light or sound. The suggested block diagram is as follows.

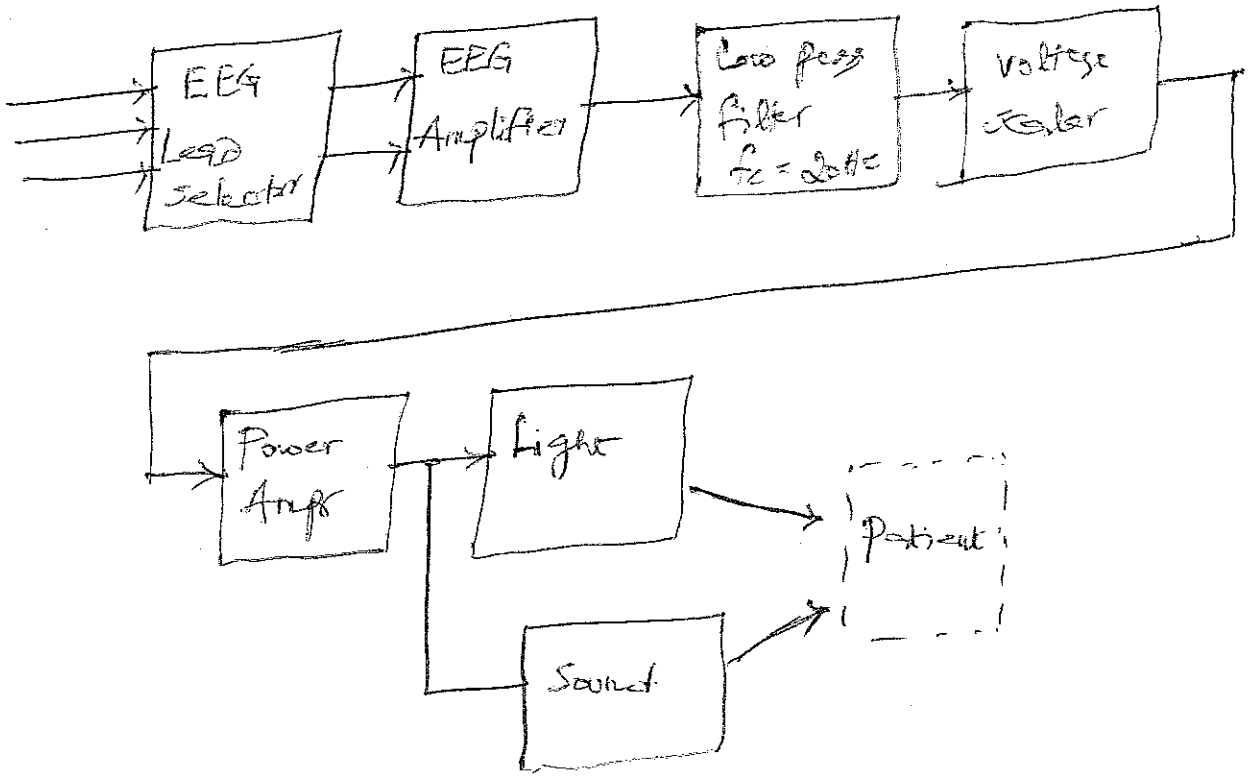

4. The block diagram design of a telemetry system to transmit Temperature, pulse rate and blood pressure.

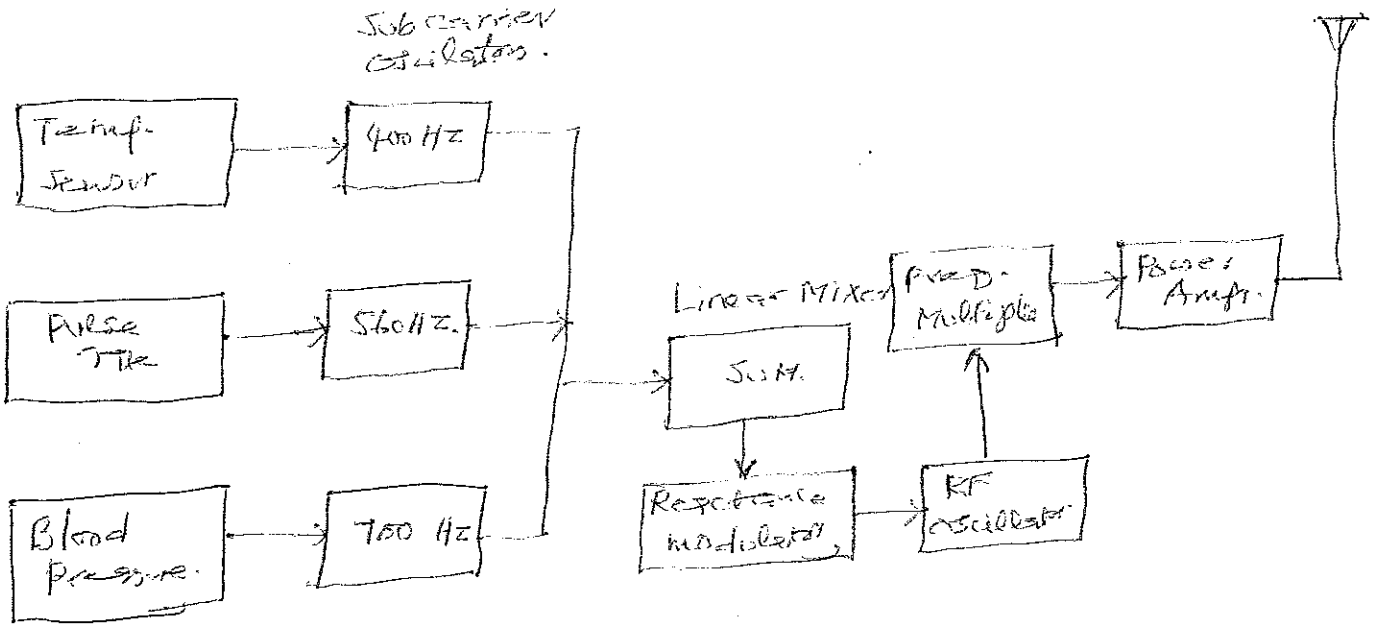

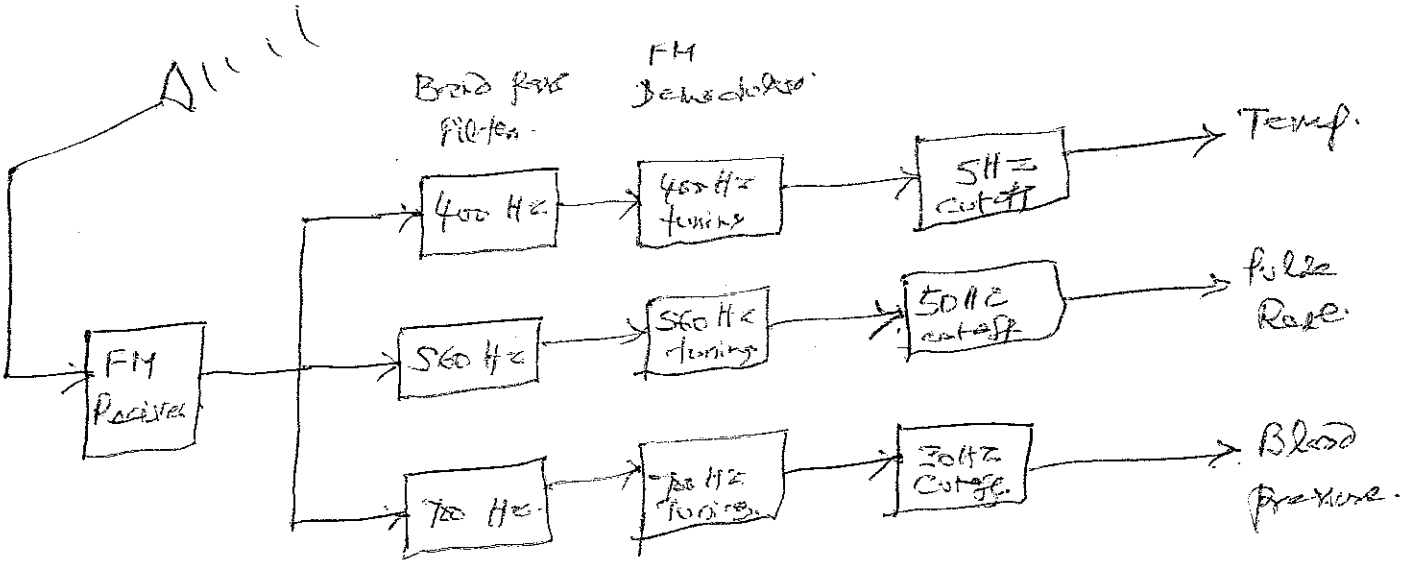

BITS PILANI DUBAI CAMPUS

DUBAI INTERNATIONAL ACADEMIC CITY

TEST 1(CLOSED BOOK)

MEDICAL INSTRUMENTATION -- INSTR C481

DATE: 4-3-2013 MAX. MARKS: 25

TIME: 50 MTS WEIGHTAGE: 25%

Answer ALL Questions

1. Explain the following with reference to biomedical instrumentation:
   Sensitivity, Linearity, Signal to Noise ratio and Isolation.

2. You have invented a device that changes its capacitance as a function of oxygen in a sample of air you breathe. Draw the transducer type circuit exited by an audio oscillator and explain.

3. (i) Draw the waveform of the action potential and explain the different regions.
   (ii) Draw the ECG waveform and explain the different stages of the waveform.

4. (i) Show the figure of a commercial microelectrode and explain the same.
   (ii) Explain the different types of needle electrodes.

5. (i) A patient has a cardiac output of 5 liters/min, a heart rate of 90 beats/min and a blood volume of 6ltrs. Calculate the stroke volume and mean circulation time. What is the mean blood velocity in the aorta when the vessel has a diameter of 30mm.
   (ii) Draw the figure to show the relationship of heart sounds to the function of ECG and blood pressure.

4-3-2013.

SOLUTIONS

MEDICAL INSTRUMENTATION.

TEST - 1.

1. Sensitivity: It determines how small a variation of a variable or parameter can be reliably measured. It is not concerned with the absolute levels but rather with minute changes that can be detected. It directly determines the resolution of the device which is the minimum variation that can accurately be read.

Signal to noise ratio: It is important that the signal to noise ratio be as high as possible. In the hospital, power line freq. noise or interference is common and is usually picked in long leads. Poor grounding is the cause of this noise problem.

Linearity: The degree to which variations in the output of an instrument follow input variations is referred to as linearity of the device. In a linear system the sensitivity would be same for all absolute levels of input.

Isolation: Measurements must be made on patients or experimental animals in such a way that the instrument does not produce a direct electrical connection between the subject and ground.

Electrical isolation can be achieved by using magnetic or optical coupling techniques or radio telemetry.

2. The device absorbs humidity and changes its capacitance. Thus the device should have two conductive plates separated by a material which can absorb the oxygen and thus changing the capacitance. The construction looks like shown.

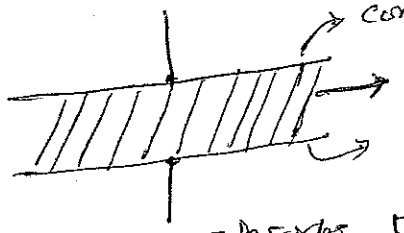

The absorbing material absorbs the humidity and changes the over all capacitance of the device. The capacitance can be detected by connecting the transducer in a bridge ckt and applying an a.c signal in audio freq. range like 5 KHz.

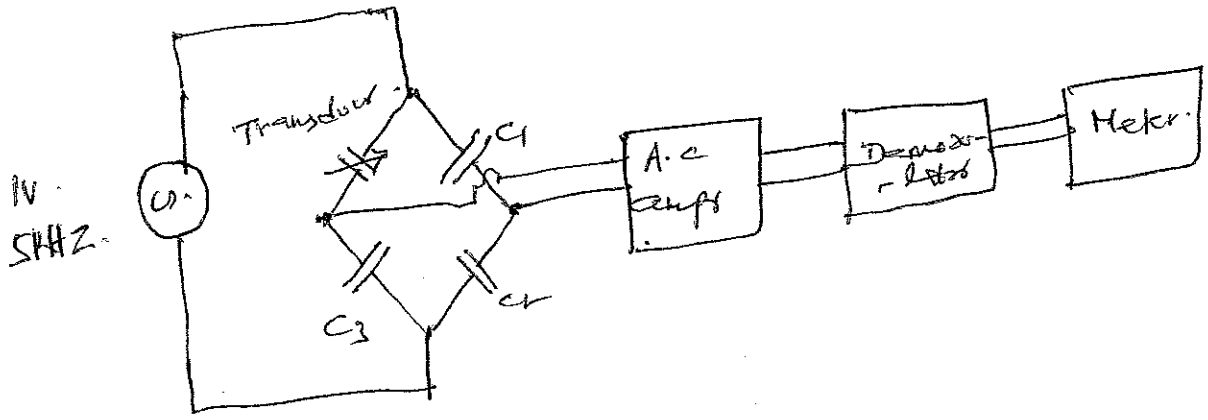

The set up is shown. The a.c signal applied is of 5KHz 1V. The change in the humidity causes change in capacitance and the bridge output is a modulated output. This is amplified and demodulated and the value indicated. The indicated voltage is a function of humidity.

3. (i)

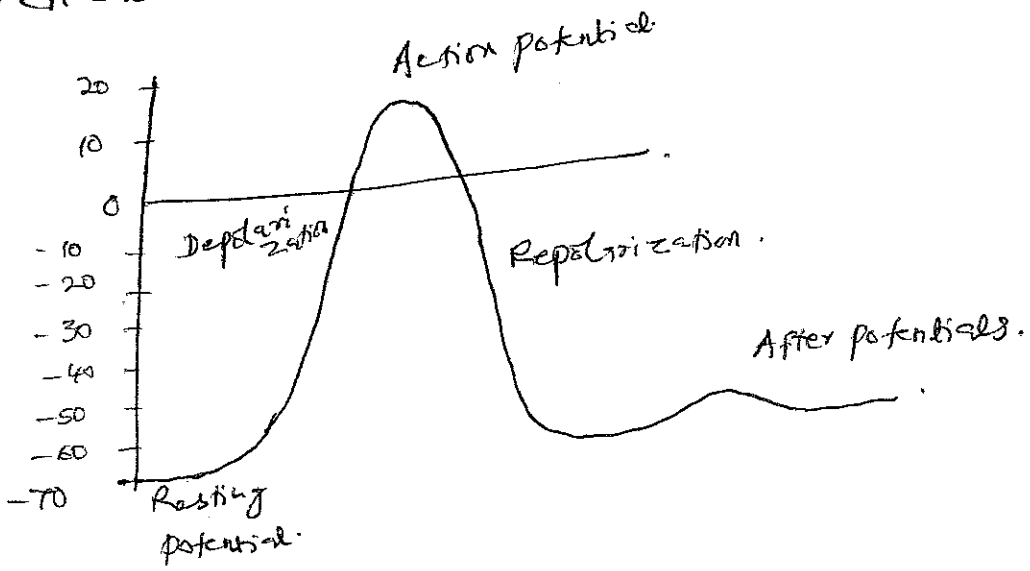

Typical action potential waveform beginning at the resting potential, depolarizing and returning to the resting potential after repolarization. In nerve and muscle cells, repolarization occurs so rapidly following depolarization that the action potential appears as a spike of as little as 1msec. total duration. Heart muscle on the other hand, repolarizes much more slowly with the action potential for heart muscle usually lasting from 150 - 300 msec.

Following the generation of an action potential, there is a brief period of time during which the cell cannot respond to any new stimulus. This is called absolute refractory period.

3 ii

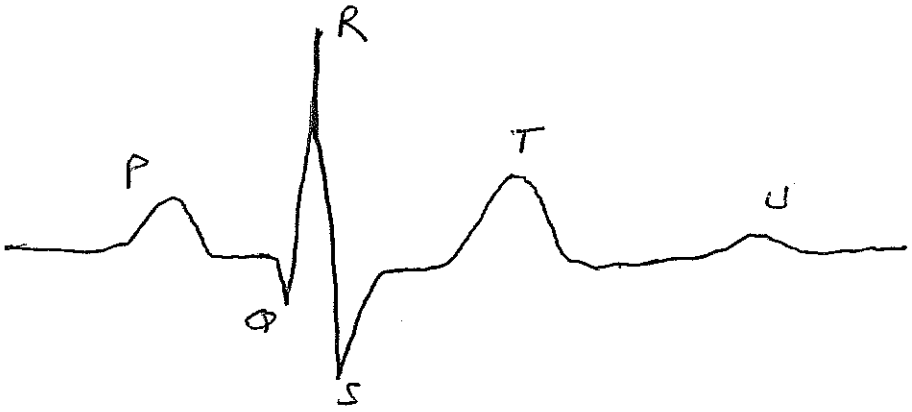

Typical ECG waveform is shown. P, QRS, T are the events related to the action potential propagation pattern. P wave is designated as the baseline or the isopotential line. The P wave is designated as the baseline or ~~the~~ is represent~~s~~ depolarization of the atrial musculature. The QRS complex is the combined result of the repolarization of the atria and the depolarization of the ventricles, which occur almost simultaneously. The T wave is the wave of ventricular repolarization where as the U wave if present is the result of after potentials in the ventricular muscle.

4. (i) Microelectrodes are electrodes with tips sufficiently small to penetrate a single cell in order to obtain readings from the cell. The tip must be small enough to permit penetration with out damaging the cell. They are of two types, Metal and micropipet. Metal microelectrodes are formed by electrolytically etching the tip of a fine tungsten or stainless-steel wire to the desired size. Then the wire is coated almost to the tip,

of a fine tungsten or with an insulating material. Some electrolytic processing can also be performed on the tip to lower impedance.

A commercial microelectrode is shown.

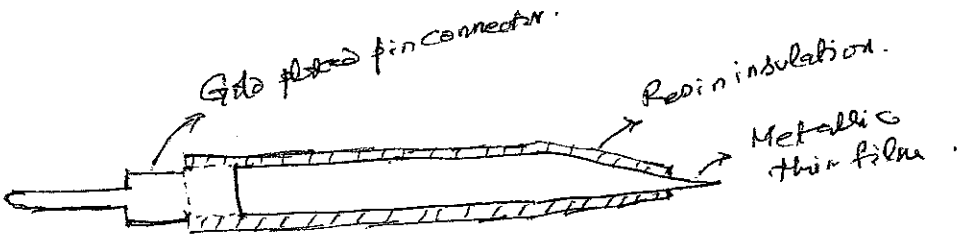

In this electrode a thin film of precious metal is bonded to the outside of a drawn glass microelectrode. The manufacturer claims such advantages as lower impedance than the micropipet electrode, infinite shelf life, repeatable and reproducible performance.

Microelectrodes because of their small surface areas, have impedances well up into megohms. For this reason amplifiers with extremely high impedances are required to avoid the ckt and to minimize the effects of small changes in interface impedance.

4 ii) To reduce impedance, movement artifacts some use subdermal needles to penetrate the scalp EEG measurements. They are not inserted into the brain, they merely penetrate the skin.

In animal research longer needles are actually inserted into the brain to obtain measurement

This process requires longer needles precisely located by means of a map of the brain. A stereotaxic instrument is used to hold the animals head and guide placement of electrodes.

In some applications simultaneous measurement from various depths in the brain along a certain axis is required. This type of electrode consists of a bundle of fine wires each terminating at a different depth of each having an exposed conductive surface at a specific depth. These are brought to the surface of the scalp.

For EMG, needle electrodes consist of fine insulated wires placed so that their tips which are bare are in contact with the nerve muscle or other tissue from which the measurement is made. wire electrodes of copper or platinum are often used for EMG. The hypodermic needle is sometimes a part of the electrode configuration. A single wire inside the needle serves as a unipolar electrode, which measures the potentials at the pt. of contact. If two wires are placed, it provides a very localized measurement between the two wire tips.

5i.

Cardiac output = 5 liters/min.

Heart rate = 90 beats/min.

Blood volume = 6 liters.

$$\text{Stroke volume} = \frac{\text{Cardiac output}}{\text{Heart beats/min}} = \frac{5 \text{ ltr/min}}{90 \text{ beats/min}}$$

$$= 0.0556 \text{ ltrs/beat.}$$

$$\text{Mean circulation time} = \frac{\text{Amount of blood in circulation}}{\text{Blood volume}}$$

$$= \frac{6}{5} = 1.2 \text{ min.}$$

$$\text{Mean blood velocity} = \frac{\text{Blood flow or cardiac output}}{\text{Area of the vessel.}}$$

$$= \frac{5 \text{ lts/min}}{3.14 \times \left(\frac{30}{2}\right)^2}$$

$$= \frac{5}{3.14 \times 225} = \frac{5}{706.5}$$

$$= 0.00708 \text{ Lts/min}\cdot(\text{mm})^2.$$

5 ii


Blood pressure.
Aortic valve opened
Aortic valve closed.
Mitral valve closed.
Mitral valve open.
Heart sounds.
First
Second
Third.
ECG
P
Q
R
S
T

BITS PILANI DUBAI CAMPUS

DUBAI INTERNATIONAL ACADEMIC CITY

QUIZ 2

MEDICAL INSTRUMENTATION -- INSTR C481

DATE: 14-5-2013 MAX. MARKS: 7

TIME: 20 MTS WEIGHTAGE: 7%

Answer ALL Questions

1. Name the components which are included in a cardiac care unit.

2. Under what circumstances low rate alarm is activated.

3. Differentiate between bouncing ball display and non fade display.

4. Differentiate between afferent and efferent nerves.

5. What is autonomic nervous system. What are the subsystems of this.

6. How are neuronal firing measurements done.

7. How do you quantify EMG.

BITS PILANI DUBAI CAMPUS

DUBAI INTERNATIONAL ACADEMIC CITY

QUIZ 2

MEDICAL INSTRUMENTATION -- INSTR C481

DATE: 14-5-2013 MAX. MARKS: 7

TIME: 20 MTS WEIGHTAGE: 7%

Answer ALL Questions

1. Name the components which are included in a cardiac care unit.

(1) Skin electrodes to pick up ECG. (2) Amplification Equipment (3) Display to permit direct observation of the ECG waveforms. The central nurses station has a larger screen. (4) Rate meter used to indicate the average no. of heart beats per min and to provide a continuous indication of the heart rate. (5) An alarm system

2. Under what circumstances low rate alarm is activated.

Low rate alarm can be falsely activated if the R wave of ECG is of insufficient amplitude to trigger the rate meter. This can happen if the contact between the electrode and the skin becomes disturbed because of improper application of the electrodes, excessive patient sweating or drying of the electrode paste or Jelly. Sometimes it is mistaken as failure of the Cardiac System.

3. Differentiate between bouncing ball display and non fade display.

Bouncing ball display is nothing more than an oscilloscope with the slow speed horizontal sweep. Sweep rates of 25 and 50 mm/sec are often included to correspond standard ECG speeds. Multiple traces are obtained by an electronic chopper.

In non fade method, the electron beam rapidly scans the entire surfaces of the CRT screen in a television like raster pattern but with brightness level so low that the background raster is not visible. The beam is brightened only [illegible] is applied to CRT z axis modulation.

4. Differentiate between afferent and efferent nerves.

Nerves that carry sensory information from various parts of the body to the brain are called afferent nerves. Those that carry signals from the brain to operate various muscles are called efferent nerves.

5. What is autonomic nervous system. What are the subsystems of this.

Autonomic nervous system is involved with emotional responses and controls smooth muscles in various parts of the body, heart muscle and secretion of a no. of glands. It is sub divided into sympathetic sys. which speeds up the heart, causes secretion of some glands and inhibits other body functions and parasympathetic nervous sys. tend to slow the heart and control contraction and secretion of the stomach.

6. How are neuronal firing measurements done.

A gross nerve firing measurement is obtained when a relatively large electrode is placed in the vicinity of a nerve or a large no. of neurons. The result is a summation of the action potentials from all the neurons. The action potential of a single neuron can be observed extracellularly with a microelectrode or intracellularly with a microelectrode penetrating the cell.

7. How do you quantify EMG.

The simplest method is measurement of the amplitude alone. In this case, the max. amplitude achieved for a given type of muscle activity is recorded. The amplitude is a rough indication of the amt. of muscle activity and is dependent on the location of the measuring electrode with respect to muscle.

BITS PILANI DUBAI CAMPUS

DUBAI INTERNATIONAL ACADEMIC CITY

QUIZ 1

MEDICAL INSTRUMENTATION -- INSTR C481

DATE: 2-4-2013 MAX. MARKS: 8

TIME: 50 MTS WEIGHTAGE: 8%

Answer ALL Questions

1. What is Mean Arterial Pressure.

2. Name FOUR direct measurement techniques of blood pressure.

3. What are the three modes of isolation of a fluid column blood pressure transducer.

4. Briefly describe implantable transducers.

5. Name FOUR physical principles on which blood flow meters are developed.

6. Draw the waveforms used in magnetic blood flow meters and error signals induced by the current.

7. If the injection rate is 5mg/lit and flow rate is 4 ltrs/min, find the concentration of the dye.

8. Name FOUR types of plethysmography.

BITS PILANI DUBAI CAMPUS

DUBAI INTERNATIONAL ACADEMIC CITY

QUIZ 1

MEDICAL INSTRUMENTATION -- INSTR C481

DATE: 2-4-2013 MAX. MARKS: 8

TIME: 50 MTS WEIGHTAGE: 8%

Answer ALL Questions

1. What is Mean Arterial Pressure.

MAP is a weighed average of systolic and diastolic pressure. Generally MAP falls about one third of the way between the diastolic low and systolic peak.

$$MAP = \frac{1}{3}(\text{Systolic} - \text{Diastolic}) + \text{Diastolic}.$$

2. Name FOUR direct measurement techniques of blood pressure.

- Catheterization method involving the sensing of blood pressure through a liquid column.
- Catheterization method of placement of transducer at the actual site of measurement.
- Percutaneous methods in which the blood pressure is sensed in the vessel.
- Implantation Techniques.

3. What are the three modes of isolation of a fluid column blood pressure transducer.

(i) External Isolation of the case with a plastic sheath which provides protection from extraneous voltages.

(ii) Standard internal isolation of the sensing elements from inside of the transducer case and the frame.

(iii) Additional isolation of the frames from the case and the diaphragm in case of wire breakage.

4. Briefly describe implantable transducers.

This can be implanted into the wall of a blood vessel or into the wall of the heart itself. This is used for long term investigations in animals.

It is made of titanium which has excellent corrosion resistance characteristics, a relatively low thermal

coeff of expansion and low modulus of elasticity. Four semiconductor strain gages are bonded to the inner surface of the pressure sensing diaphragm. It is 4.5 mm. in diameter.

5. Name FOUR physical principles on which blood flow meters are developed.

Electromagnetic induction, ultrasound transmission or reflection, thermal convection, Radiographic principles, Indicator dilution.

6. Draw the waveforms used in magnetic blood flow meters and error signals induced by the current.

Magnet current

Induced voltage.

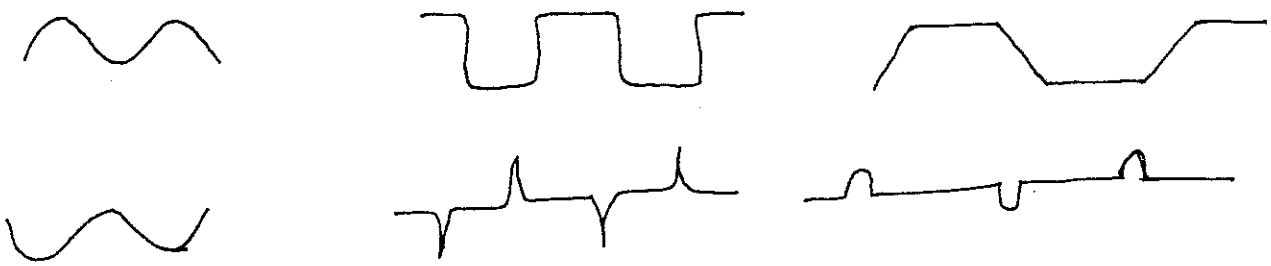

7. If the injection rate is 5mg/lit and flow rate is 4 ltrs/min, find the concentration of the dye.

$$F\ (\text{ltrs/min}) = \frac{I\ (\text{mg/min})}{c\ (\text{mg/litr})}$$

$$4 = \frac{5}{c} \qquad \therefore\ c = 1.25\ \text{mg/ltr.}$$

8. Name FOUR types of plethysmography.

Capacitance, Mercury strain gauge, Impedance, Photoelectric, occulopneumography, Rheoencephalography.