Student I.D No:----------

BITS, PILANI-DUBAI, INTERNATIONAL ACADEMIC CITY, DUBAI
SECOND SEMESTER 2008-2009

Comprehensive Examination

Course Name: Computer Aided Design
Course No. : ME C382

Max Marks: 70
Weightage: 35%

Duration : 3 Hr

Date: 21-05-09

NOTE:
i) Write your ID Number on the top immediately on the receipt of this paper.
ii) ***Maintain the order*** while answering the questions.
iii) Required values, tables & charts are given in the paper.
iv) If any data is missing, assume the suitable value with proper justification.

Q.1 **(Marks: 4+4)**

(a) Justify the need of CAD for modern Industries, giving the suitable example.

(b) Describe the CAD tools required for various design Phases.

Q.2 **(Marks: 4+4)**

(a) An eight-plane raster display has a resolution of 1280 X 1024 & a refresh rate of 60 HZ noninterlaced. Find
i) The RAM size of the bitmap.
ii) The time required to display a scan line & a pixel.

(b) Write the names of two software for each of the following:
i) CAD ii) CAM
ii) CAD/CAM iii) CAE

Q.3 **(Marks: 4+4)**

(a) Show that the following parametric equations are equations of a line in a plane:

$$x = \frac{a+bt}{e+ft} \qquad y = \frac{c+dt}{e+ft}$$

(b) Explain the following properties of B-Spline function:
i) Partition of unity ii) Positivity
iii) Local support iv) Continuity

Q.4 **(Marks: 4+4)**

(a)

A bicubic surface is defined by the four points P_1, P_2, P_3 & P_4 as shown in figure-1. Determine:
i) Equation of this surface.
ii) Tangent & twist vectors.

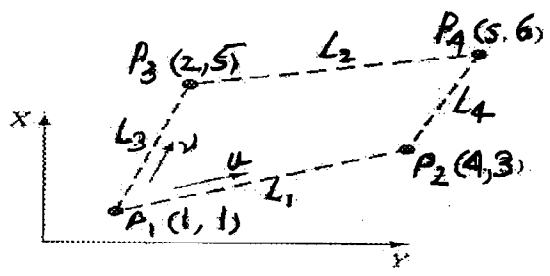

Figure-1

P.T.O

(b) Find the lofting surface defined by linear blending between the cross-sections shown in following figure-2.

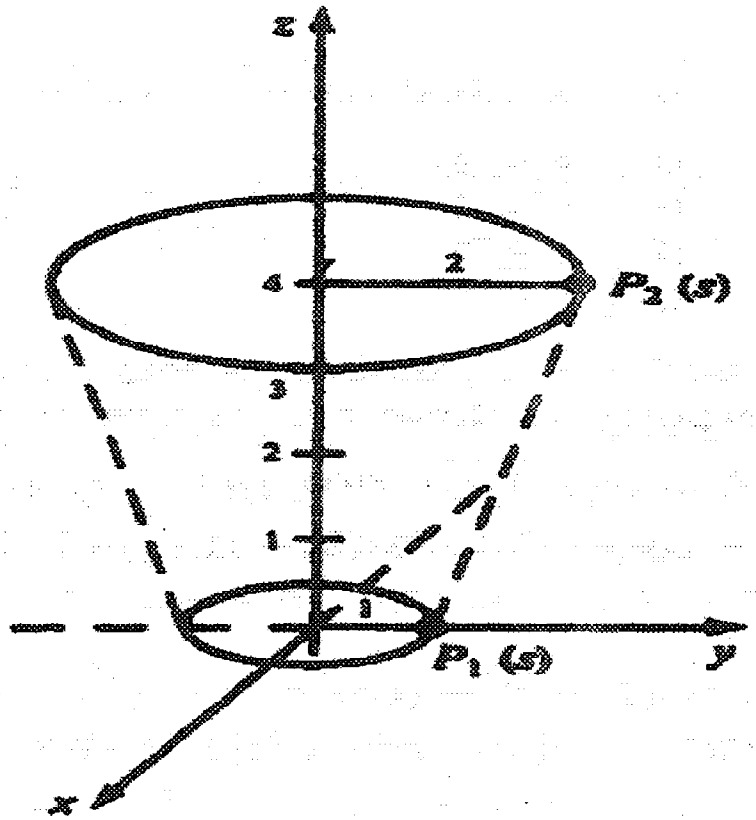

Figure-2

Q.5 **(Marks: 4+4)**

(a) Sketch the *Constructive Solid Geometry* tree for the solid S1 shown in above figure-3 & then:

(i) Check the prefect ness of tree.

(ii) Calculate the interior nodes.

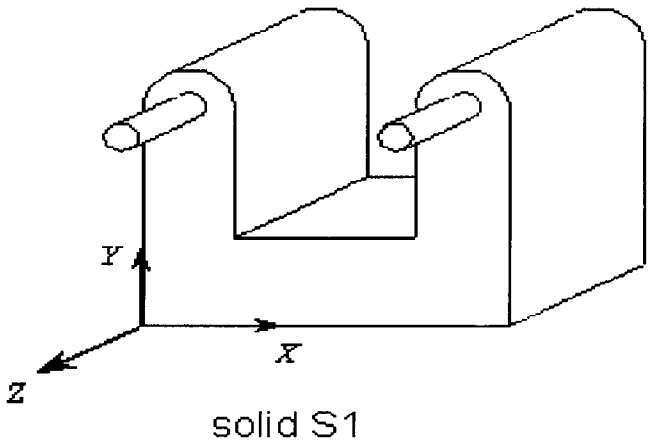

Figure-3

(b) What is sweep? Differentiate between linear & non linear sweeps.

Student I.D No:----------

Q.6 **(Marks: 4+4)**

(a) Explain the Graphical Kernel System (GKS) giving the suitable sketch.

(b) Why are hidden surface algorithms are needed? Name any two such algorithms.

Q.7 **(Marks: 4+4)**

(a) Given a point P (1, 3, -5) using homogeneous transformation:
i) Calculate the transformed point P* if P is translated by d= 2 i + 3 j – 4 K & then rotated by 30° about Z axis.
ii) Calculate the transformed point P* if P is firstly rotated by 30° about Z axis & then translated by d= 2 i + 3 j – 4 K.
iii) Is the final position of point P* will be the same in both the above cases? Explain your answer.

(b) The pyramid defined by coordinates A (0,0,0),B (1,0,0),C(0,1,0) & D (0,0,1) is rotated by 45° about a line L that has the direction V=J+K and passing through point C (0,1,0). Determine the coordinate of rotated figure--4.

Figure-4

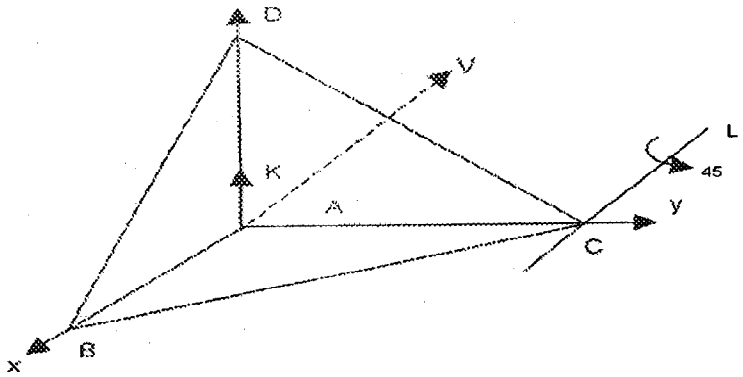

Q.8 **(Marks: 4+4)**

(a) Describe the criterion used for stress calculation in generative structure analysis of CATIA software, also discuss stress variation pattern along with colours.

(b) Derive the functional Π for the cantilever beam of length L & cross-sectional moment of inertia I. It is loaded with transverse load P as shown in figure-5.

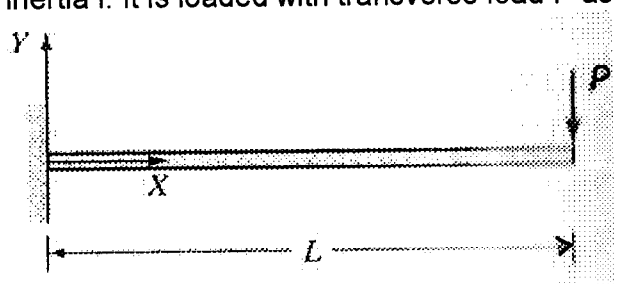

Figure-5

The beam lateral deflection is given by the following Equation

$$Ely'''' = 0$$

Where E is the modulus of elasticity of the bar Material & $y''''=D^4y/Dx^4$.

P.T.O

Student I.D No:----------

Q.9 **(Marks: 3+3)**

(a) Differentiate between CAD/CAM & CIM.

(b) Comment on the following Diagrams.

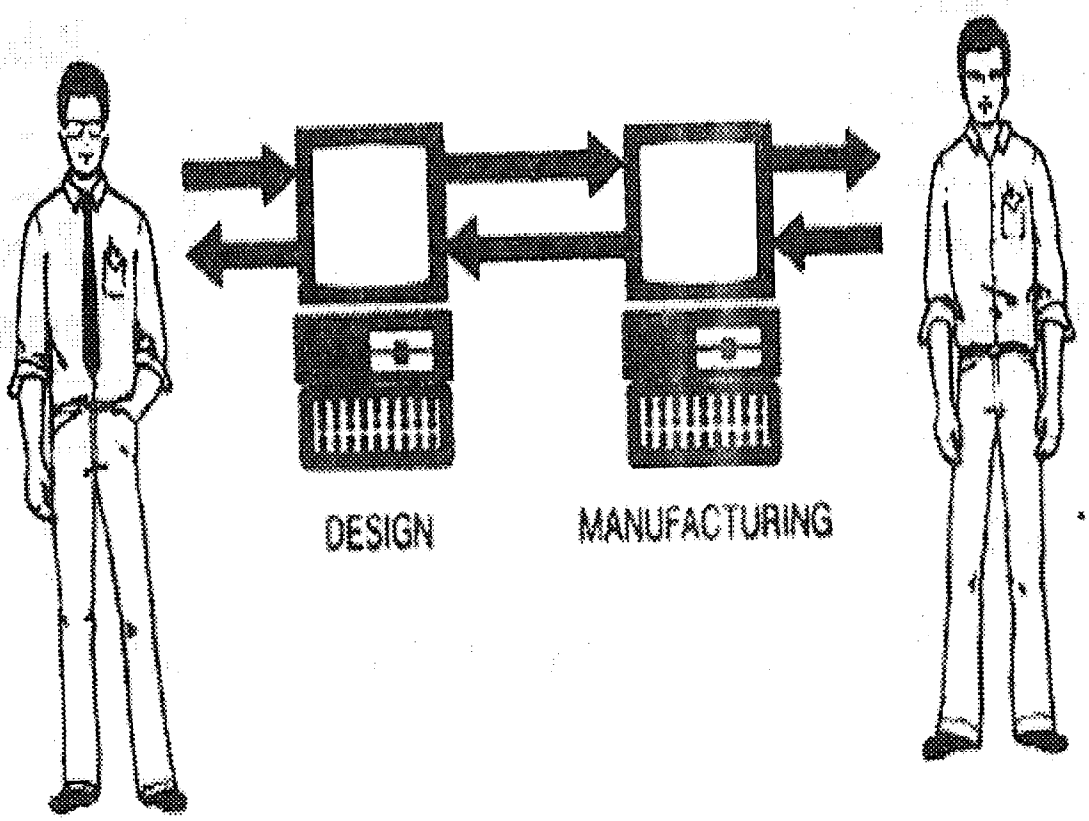

-----END-----

P.T.O

Student I.D No:----------

BITS, PILANI-DUBAI, INTERNATIONAL ACADEMIC CITY, DUBAI
SECOND SEMESTER 2008-2009

TEST-2 (Open Book)

Course Name: Computer Aided Design
Course No. : ME C382
Duration : 50 Minutes

Max Marks: 60
Weightage: 15%
Date: 30-04-2009

NOTE: i) Write your ID Number on the top immediately on the receipt of this paper.
ii) Maintain the order while answering the questions.
iii) If any data is missing, assume the suitable value with proper justification.

Q.1 Find the equation of Bezier surface to cover the region R as given in figure-i. Also find the surface vector & its mid point. ***(Marks:12)***

Q.2 Consider a paraboliacally blended curve defined by the points P_1[0 1 0] P_2[2 3 0] P_3[4 1 0] & P_4[5 2 0]. Rotate the curve about x-axis through 360° to obtain the *surface of revolution*. Calculate the point on surface at u = 0.5 & ø= π/3.Also give some is the applications of resulting surface. **(Marks: 12)**

Q.3 What are the Post Processors, describe any two CAM Post Processors. ***(Marks:12)***

Q.4 Sketch the *Constructive Solid Geometry* tree for the solid S1 shown in figure-2 & then:
(i) Check the prefect ness of tree.
(ii) Calculate the interior nodes. **(Marks: 12)**

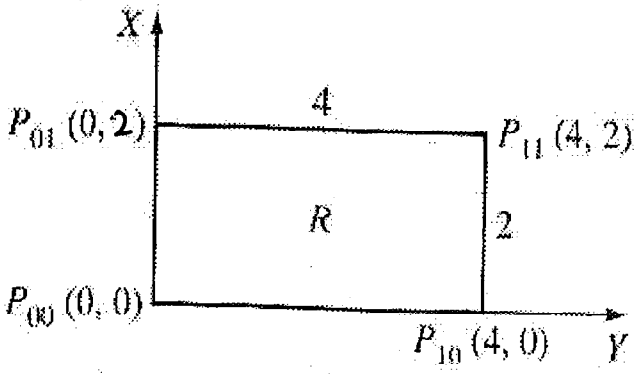

Figure-1

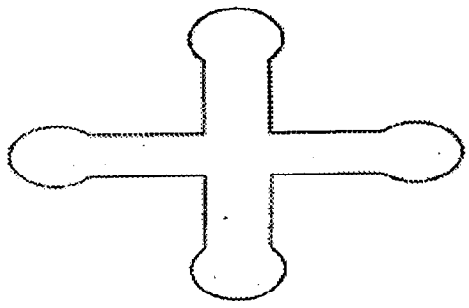

Solid S_1
Figure-2

Q.5
Write the Homogeneous Matrix of point P* transformed from point P at an angle θ about an axis parallel to Z- axis. & passing through P1 as shown in figure-3.

Figure-3
→

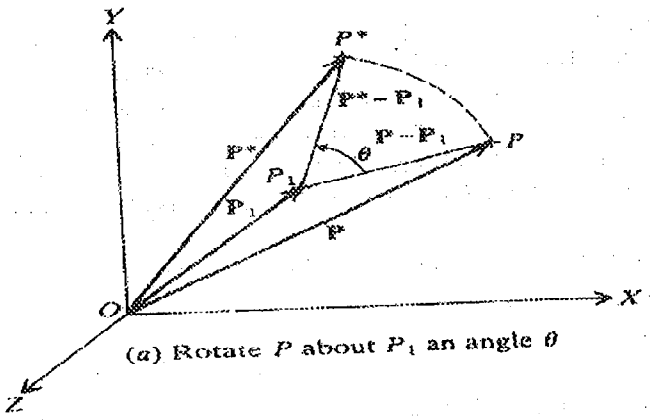

(Marks:12)

------END------

Student I.D No:----------

BITS, PILANI-DUBAI, INTERNATIONAL ACADEMIC CITY, DUBAI
SECOND SEMESTER 2008-2009

TEST-1 (Closed Book)

Course Name: Computer Aided Design
Course No. : ME C382
Duration : 50 Minutes

Max Marks: 60
Weightage: 15%
Date: 22-03-2009

NOTE:
i) Write your ID Number on the top immediately on the receipt of this paper.
ii) Maintain the order while answering the questions.
iii) Required values, tables & charts are given in the paper.
iv) If any data is missing, assume the suitable value with proper justification.
v) Attempt all the questions.

Q.1 What do you understand by Micro Computer based CAD? List the Hardware & software required for running the CATIA V5 R17 at your Desktop.

(Marks:3+2)

Q.2 Differentiate between the following:
i) CAD & CAM
ii) Digitizer & Light Pens.

(Marks:5+5)

Q.3 Explain the following with suitable example. ***(Marks5+5)***
i) Analytical curves
ii) Synthetic curves

Q.4 Find the equation of Hermit cubic curve defined by the following points. ***(Marks:10)***

$P_0(1,1)$ $P_1(6,5)$ $P'_0(0,4)$ $P'_1(4,0)$

Also calculate the mid point on the curve curve.

Q.5 Develop the equation for a Bezier curve, find the points on the curve for u=0, u= 0.25,u=0.5,u=0.75,u=1.0 & plot the curve. The coordinates of four control points are given by
P_0= [0,0,0] , P_1= [0,2,0] , P_2= [4,2,0] , P_3= [4,0,0] ***(Marks: 10)***

Q.6 A geometric curve defined by n+1 control points P_i is given by following equation:

$$P(u) = \sum_{i=0}^{n} P_i N_{i,k}(u)$$

Where the parameter u ranges between $0 \leq u < U_{max}$ & the other symbols have their usual meaning as per text book. Name this curve & amend the above equation if this curve passes through four control points $[2\ 2\ 0]^T$ $[2\ 3\ 0]^T$ $[3\ 3\ 0]^T$ $[3\ 2\ 0]^T$.

(Marks:5+10)

END

BITS, PILANI-DUBAI, INTERNATIONAL ACADEMIC CITY, DUBAI
SECOND SEMESTER 2008-2009
ME UC 382 Computer Aided Design (QUIZ-3)

MAX MARKS: 10 DURATION: 15 MINUTES WEIGHTAGE: 5%

NAME OF STUDENT: _____ I.D:_____

NOTES: i) Change of answer & overwriting is not permitted.
ii) If any one found in signal nodding or any form of cheating, his copy will be marked by # and forwarded to examination committee for further action.

Q.1. Name the most elementary method used for visual realism.
Ans . Model Clean-Up

Q.2 What is the purpose of Z-Buffer Algorithm?
Ans . Hidden Surface Removal

Q.3 Write the name of any two assembly tools.
Ans . : X-Sectional Views, Mass property Calculation

Q.4 Give the vector equn used for conversion of CMY colour model to RGB Colour Model?
Ans .

$$\begin{bmatrix} R \\ G \\ B \end{bmatrix} = \begin{bmatrix} 1 \\ 1 \\ 1 \end{bmatrix} - \begin{bmatrix} C \\ M \\ Y \end{bmatrix}$$

Q.5 Name any two data exchange formats.
Ans: IGES, STEP

Q6 What is IGES? Give its latest version.
Ans: Ver.4

Q.7 What will be the effect on the size & shape of the model if scaling factors are $Sx \neq Sy \neq Sz$.
Ans: Shape & size both will deform

Q.8 Write the Reflection Matrix which applies to the origin of a coordinate system.
Ans .

$$\begin{bmatrix} \pm 1 & 0 & 0 & 0 \\ 0 & \pm 1 & 0 & 0 \\ 0 & 0 & \pm 1 & 0 \\ 0 & 0 & 0 & 1 \end{bmatrix}$$

Q.9 Write a 4X4 homogeneous rotation matrix if a vector rotates about X-axis to α°.
Ans .

$$\begin{bmatrix} 1 & 0 & 0 & 0 \\ 0 & \cos\alpha & -\sin\alpha & 0 \\ 0 & \sin\alpha & \cos\alpha & 0 \\ 0 & 0 & 0 & 1 \end{bmatrix}$$

Q.10 In homogenous coordinates n dimensional space is represented by how many coordinates.
Ans: By (n+1) coordinates

Q.2 What is the basis of Brazier curve?
Ans: Bernstein Polynomial. **[Marks: 1]**

Q.3 How would you generate an ellipse in parametric form? **[Marks: 2]**
Ans:
The parametric equation of an ellipse can be written as:

$$x = x_c + A \cos u$$
$$y = y_c + B \sin u \qquad 0 \le u \le 2\pi \qquad z = z_c$$

Q.4 Draw any object which shows a 2.5D modeling. **[Marks: 3]**
Ans:

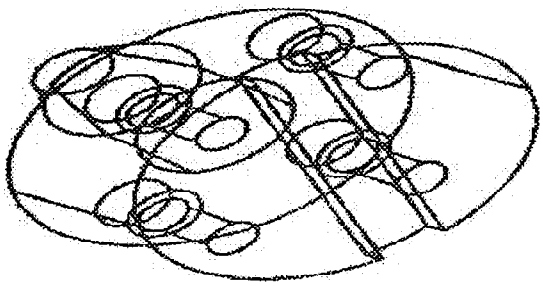

Q.5 Find the equation of hermit cubic spline that connects P_0 and P_2 & that is tangent two line segments shown in figure. **[Marks: 3]**

Answer the question on back side

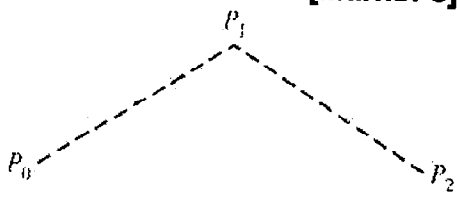

Ans .

$\mathbf{P}'_0 = \mathbf{P}_1 - \mathbf{P}_0$ and $\mathbf{P}'_1 = \mathbf{P}_2 - \mathbf{P}_1$. The two end points are $\mathbf{P}_0$ and $\mathbf{P}_2$. Substituting into Eq. gives

$$\mathbf{P}(u) = (u^3 - u^2 - u + 1)\mathbf{P}_0 - u(u-1)\mathbf{P}_1 + u^2(-u+2)\mathbf{P}_2$$

BITS, PILANI-DUBAI, INTERNATIONAL ACADEMIC CITY, DUBAI
SECOND SEMESTER 2008-2009
ME C 382 Computer Aided Design (QUIZ-1)

MAX MARKS: 10 DURATION: 15 MINUTES WEIGHTAGE: 5%

NAME OF STUDENT: _____ I.D: _____

NOTES: i) Change of answer & overwriting is not permitted.
ii) If any one found in signal nodding or any form of cheating, his copy will be marked by # and forwarded to examination committee for further action.

Q.1 Name the CAD tools required for Design communication & documentation. [I M]
Ans: Drafting & detailing shaded images.

Q.2 How the product cycle starts? [I M]
Ans: Need identified based on customer & Market Demand. Need identified based on customer & Market Demand.

Q.3 Who & when invented about orthographic projection? [I M]
Ans: French Mathematician Gaspard Monge in 1746

Q.4 List the four computer Aided Design software. [I M]
Ans: French Mathematician Gaspard Monge in 1746

Q.5 What is the aspect ratio of an image. [I M]
Ans: Ratio of horizontal to vertical pixel.

Q.6 For the Position vectors $P_1[1\ 2]$ & $P_2[4\ 3]$, determine the parametric representation of line segments between them. Also determine the slope & tangent vector of the line segments. [5 M]