BITS, PILANI – DUBAI CAMPUS
Knowledge Village, Dubai
Year III – Semester II 2006 – 2007

COMPREHENSIVE EXAMINATION (Closed Book)

Course No : **INSTR UC312**

Course Title : **Industrial Instrumentation & Control**

Date : **May 29th 2007**

Time : **3 Hours** **Max.Marks : 40 (40 %)**

NOTE: **1. ANSWER ALL QUESTIONS IN SEQUENTIAL ORDER.**

2. ALL THE SYMBLOS AND WORDS CARRY THEIR USUAL MEANINGS, UNLESS OTHERWISE STATED.

(8 x 5 = 40)

1. Draw the RLD and LLD to sequentially energise solenoid A, B, C, D with the time delay of 5 sec's each other. Use data Manipulation Instruction. [5 M]

2. a. A pneumatic PI controller with PB = 25% & T_R=2 min saturates to 15 psig at t =17.5 min after subjected to step error at t=0. Find the error. [2 M]

b. An integral controller is used for speed control with a set point of 12 rpm with in a range of 10 to 15 rpm. The controller output is 22% initially. The constant K_I = -0.15% controller output per second per percentage error. If the speed jumps to 13.5rpm, calculate the rate of controller output change & controller output after 2 sec's for a constant e_p. [3 M]

3.a. Explain the different types of tuning methods with respect to errors for conventional controllers. [3 M]

b. Mention the parameter settings of P, PI, PID controllers using ultimate cycle method. [2 M]

4. a. What is Adaptive control? Explain the types of adaptive control. [3 M]

b. Under what condition we should select FF +FB complex control system. What will be the disadvantage of FF+ FB? [2M]

5. a. What are the different types of Activation functions in neural network? [2 M]

b. What do you mean by learning a neural network? Explain the types and mention its applications. [3 M]

6. a. List the desired features of DCS and give the comments. [3 M]

b. What is the human decision making process in artificial Intelligence? [2 M]

7. The Ranges of co polymerization Reactor is given by

Composition C = 0.56 to 0.64

Temperature T = 76 to 84 ° c

Flow rate F = 16 to 20 Kg/ hr.

Find the crisp data of flow rate when C = 0.586 & T = 80.5°c using Fuzzy logic control. [5 M]

8. a. What is the principle of Flapper nozzle system? [2 M]

b. What do you mean by valve inherent characteristics of control valve? What are the types of it? [2 M]

c. Lined butterfly valve has..... lining. [1 M]

ALL THE BEST

BITS, PILANI – DUBAI CAMPUS

Knowledge Village, Dubai

Year III – Semester II 2006 – 2007

TEST II (Open Book)

Course No.: INSTR UC312

Course Title: Industrial Instrumentation & Control

Date:29.04.07 Time: 50 Minutes M.M. = 20 (20 %)

NOTE: ONLY TEXT BOOK IS ALLOWED

1. Using Hebb rule, train the OR Gate to the neural network . Try the maximum possible ways and indicate your comments. The order for training is

X_1	X_2
1	1
1	0
0	1
0	0

(6M)

2. Find A ∘ B, A ○B, A*B

$$A = \begin{bmatrix} 1.0 & 0.0 & 0.7 \\ 0.3 & 0.2 & 0.0 \\ 0.0 & 0.5 & 1.0 \end{bmatrix} \qquad B = \begin{bmatrix} 0.6 & 0.6 & 0.0 \\ 0.0 & 0.6 & 0.1 \\ 0.0 & 0.1 & 0.0 \end{bmatrix}$$

(6M)

3. Find the Truth ness of each proportion given.

The Ranges are,

Age 15 to 45

Weight 30 to 50

Height 4 to 6

The crisp data are Age = 30, Height =5, Weight =35

1. You are young or Normal and Tall is true.
2. You are tall and average or old is very true

(4M)

4. What are the advantages and requirements of cascade control? List the reasons not to use cascade control. (2+1+1= 4M)

Name : ID No:

VERSION A

BITS, PILANI – DUBAI CAMPUS

Knowledge Village, Dubai.

Semester II 2006-2007

QUIZ II (Closed Book)

BE (Hons) III year EIE

Course No : INSTR UC312

Course Title : INDUSTRIAL INSTRUMENTATION & CONTROL

Date : 05.04.07 Time: 30Minutes M.M = 20 (10%)

Note: Each question carries 1mark. All the symbols and words carry their usual meanings, unless otherwise stated.

1. Define Neutral Zone.

2. Draw the graphical representation of sinusoidal input and the corresponding final Control element output for three position mode control.

3. Define Integral Control action.

4. What is the disadvantage of three mode controller?

5. In a open loop transient response method, T_I = ... for the PI mode.

6. In ultimate cycling method, for Quarter Amplitude criterion the T_I is calculated as .....for PID mode.

7. Which controller is used for Temperature control process?

8. How will you calculate the critical time and critical gain in frequency response method for tuning a controller?

9. ITAE stands for ..... & when it is used?

10. In pneumatic PID controller the Proportional gain, Integral time & Derivative time parameters are set by ..... & .....

11..... valve is used for flow of chemical fluids in the process.

12. For which type of process, the Cohen coon method is used for tuning a controller?

13..... valve is used for flow of corrosive fluids in the process.

14. Sluggish flow is not possible by .....Valve.

15. Feed forward control is used independently. Say yes or No. Justify your answer.

16. What is the condition for cascade control system?

17. What is the offset that results from 10% change in 'P' Controller output when proportional gain is 0.5?

18. What is the status of settling time in Preact control and why?

19. According to working principle how do you classify the control valve?

20. Define Reset Time.

BITS, PILANI – DUBAI CAMPUS

Knowledge Village, Dubai

Year III – Semester II 2006 – 2007

TEST I (Closed Book)

Course No.: INSTR UC312

Course Title: Industrial Instrumentation & Control

Date: 18.03.07 Time: 50 Minutes M.M. = 20 (20 %)

Note: All the symbols and words carry their usual meanings, unless otherwise stated.

ANSWER ALL THE QUESTIONS

1. Design a RLD for the following requirements.

The application requires an alarm to sound when a supply system leaks 5lb or more of raw material in to the vessel after a preset weight of 500 lb has been reached. When the start push button is pressed the filling solenoid and filling indicating light are turned on and raw material is allowed to flow in to the vessel. When the weight reached 500 lb the filling solenoid is deenergized and the flow is cutoff. At the same time, the filling pilot light is turned off and fill pilot light indicator is turned on. If the filling solenoid leaks 5lb or more of raw material in to the vessel, the alarm will energize and stay energize until the over flow level is reduced below 5 lb over flow limit. (Make use of Subtraction instruction). (5 Marks)

2. Using Multiplication Instruction form the ladder diagram for an oven temperature control Program. In this, PLC calculates the upper and lower dead band or on/off limits about the set point. The set point temperature is adjustable by means of thumbwheel switches and an analog thermocouple interface module is used to monitor the current temperature of the oven. In this example the set point is 400°F. Therefore the electric heater will be turned on when the temperature of the oven drops of less than 396°F and stay on until the temperature rises above 404°F. (5 Marks)

3 .a. Draw the RLD to turn on the red light using Examine off Instructions. (1.5Marks)

b. Prepare a LLD program using retentive timer at word location 060 with an input bit at 111/13, that turns on the solenoid at a output address of 010/00.After half second time delay use input switch 111/01 to reset the timer. (1.5Marks)

c. Mention any four disadvantages of Relay sequencer. (2 Marks)

4. Draw RLD for the tank shown in figure 1.

The global objective is to heat a liquid to a specified temperature and keep it there for 30 min.

The hardware has the following characteristics:

1. Start push button is NO & Stop pushbutton is NC.
2. No and NC are available for the limit switches.

The event sequences are,

1. Fill the tank.
2. Heat and stir the liquid for 30min.
3. Empty the tank.
4. Repeat form step1.

(5 Marks)

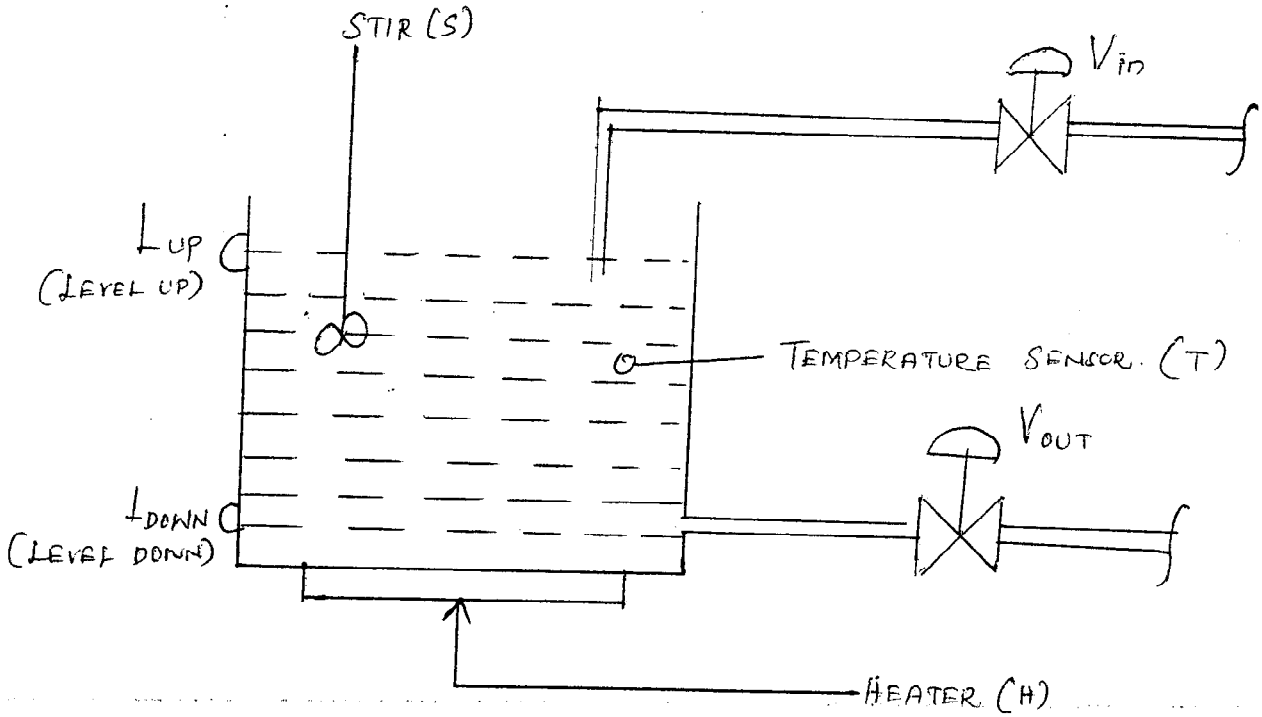

Fig (1). TANK SYSTEM.

Name : ID No:

VERSION A

BITS, PILANI – DUBAI CAMPUS

Knowledge Village, Dubai.
Semester II 2006-2007

QUIZ I (Closed Book)

BE (Hons) III year EIE

Course No : INSTR UC312
Course Title : INDUSTRIAL INSTRUMENTATION & CONTROL
Date : 01.03.07 Time: 30Minutes M.M = 20 (10%)

Note: Tick the appropriate one of the given options. Each question carries 1mark. All the symbols and words carry their usual meanings, unless otherwise stated.

1. Which of the following is most likely to be the voltage level used internally in a PLC, excluding the voltage levels that might occur during conditioning in output/ input channels.
   a. 5V
   b. 24 V
   c. 110 V
   d. 240 V

2. Draw a block diagram showing in very general terms of the main units in a PLC.

3. Decide whether each of these statements is True(T) or False(F).
   A limit switch:
   (i) Can be used to detect the presence of a moving part.
   (ii) Is activated by contacts making or breaking an electrical circuit.

   a. (i) T (ii) T
   b. (i) T (ii) F
   c. (i) F (ii) T
   d. (i) F (ii) F

4. The cycle time of a PLC is the time it takes to:
   a. Read an input signal.
   b. Read all the input signals
   c. Check all the input signals against the program.
   d. Read all the inputs, run the program and update all outputs.

5. Decide whether each of these statements is True (T) or False(F).

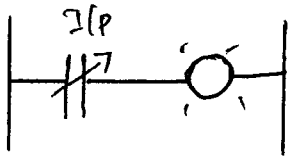

Fig (1)

Fig.(1) shows a ladder diagram rung for which:
(i) The input contacts are normally open.
(ii) There is an output when there is an input to the contacts.

a. (i) T (ii) T
b. (i) T (ii) F
c. (i) F (ii) T
d. (i) F (ii) F

6. Decide whether each of these statements is True (T) or False(F).

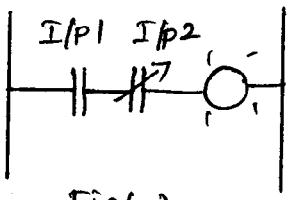

Fig(2)

Fig.(2) shows a ladder diagram rung for which:
(i) When only input 1 contacts are activated, there is an output.
(ii) When only input 2 contacts are activated, there is an output.

a. (i) T (ii) T
b. (i) T (ii) F
c. (i) F (ii) T
d. (i) F (ii) F

7. Decide whether each of these statements is True (T) or False(F).

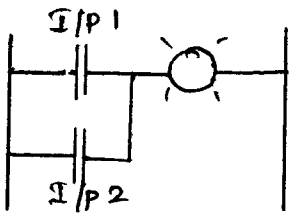

Fig(3)

Fig.(3) shows a ladder diagram rung for which there is an output when,
(i) Inputs 1 and 2 are both activated.
(ii) Either one of the inputs 1 and 2 is not activated.

a. (i) T (ii) T
b. (i) T (ii) F
c. (i) F (ii) T
d. (i) F (ii) F

8. In the circuit in Figure (4), the light will stay on:

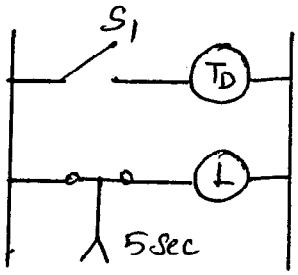

Fig(4)

a. as long as S1 is closed.
b. for 5 sec after coil TD is energized.
c. For 5 sec after coil TD is de energized.
d. both a and c.

9. Decide whether each of these statements is True (T) or False(F).
For the ladder diagram shown in Figure(5) , there is an output from output 1 when:

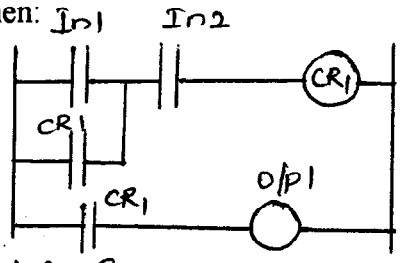

(i) There is just an input to In1
(ii) There is just an input to In2

a. (i) T (ii) T
b. (i) T (ii) F
c. (i) F (ii) T
d. (i) F (ii) F

Fig (5), (FOR PROBLEMS 9, 10)

10. Decide whether each of these statements is True (T) or False(F).
For the ladder diagram shown in Figure (5) , there is an output from output 1 when:
(i) There is an input to In2 and a momentary input to In1.
(ii) There is an input to In1 or an input to In2.

a. (i) T (ii) T
b. (i) T (ii) F
c. (i) F (ii) T
d. (i) F (ii) F

11. Decide whether each of these statements is True (T) or False(F).
For the ladder diagram shown in Figure (6) , the internal relay CR1 is energized when:

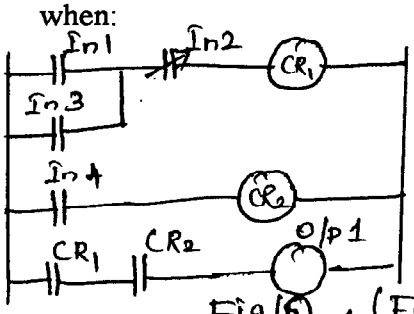

(i) There is an input to In 1.
(ii) There is an input to In3.

a. (i) T (ii) T
b. (i) T (ii) F
c. (i) F (ii) T
d. (i) F (ii) F

Fig (6) , (FOR PROBLEMS 11, 12, 13)

12. Decide whether each of these statements is True (T) or False(F).
For the ladder diagram shown in Figure (6) , the internal relay CR2 is energized when:
(i) Internal relay CR1 is energized.
(ii) Input 4 is energised.

a. (i) T (ii) T
b. (i) T (ii) F
c. (i) F (ii) T
d. (i) F (ii) F

13. Decide whether each of these statements is True (T) or False(F).
For the ladder diagram shown in Figure (6) , there is an output from output1 when:
(i) There are inputs to just In1, In 2 and In 4
(ii) There are inputs to just In 3 and in 4.

a. (i) T (ii) T
b. (i) T (ii) F
c. (i) F (ii) T
d. (i) F (ii) F

14. Decide whether each of these statements is True (T) or False(F).
For the ladder diagram shown in Figure (7) ,When there is just an input to In 1:

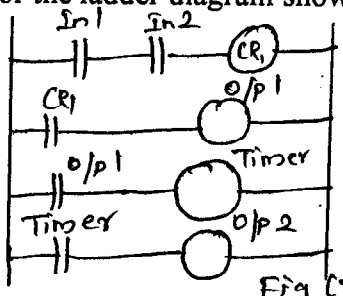

Fig (7), (FOR PROBLEMS 14, 15)

(i) The timer starts.
(ii) There is an output from output 2.

a. (i) T (ii) T
b. (i) T (ii) F
c. (i) F (ii) T
d. (i) F (ii) F

15. Decide whether each of these statements is True (T) or False(F).
For the ladder diagram shown in Figure (7) ,When there is just an input to In 1and no input to In 2 , there is an output from out 2 which:
(i) Starts Immediately.
(ii) Ceases after the timer preset time.

a. (i) T (ii) T
b. (i) T (ii) F
c. (i) F (ii) T
d. (i) F (ii) F

16. Decide whether each of these statements is True (T) or False(F).
For the ladder diagram shown in Figure (8) , when the counter is set to 5, there is an output from out 1 every time:

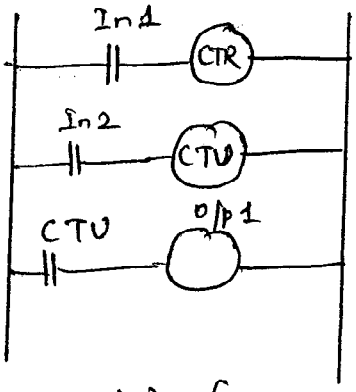

Fig (8), (FOR PROBLEMS 16, 17, 18)

(i) In 1 has closed 5 times.
(ii) In 2 has closed 5 times.

a. (i) T (ii) T
b. (i) T (ii) F
c. (i) F (ii) T
d. (i) F (ii) F

17. Decide whether each of these statements is True (T) or False(F).
For the ladder diagram shown in Figure (8) ,
(i) The first rung gives the condition required to reset the counter.
(ii) The second rung gives the condition required to generate pulses to be counted.

a. (i) T (ii) T
b. (i) T (ii) F
c. (i) F (ii) T
d. (i) F (ii) F

18. Decide whether each of these statements is True (T) or False(F).
For the ladder diagram shown in Figure (8), when there is an input to In 1;
(i) The counter contacts in the third rung closes.
(ii) The counter is ready to start counting the pulses from In 2

a. (i) T (ii) T
b. (i) T (ii) F
c. (i) F (ii) T
d. (i) F (ii) F

19. Which of the following is not a factor in determining the total scan time of a PLC?

a. Memory Location.
b, Program content
c. Program length
d. Total number of inputs and outputs used

20. The status bit of Examine off instruction is examined and found to be 1. What does this mean?